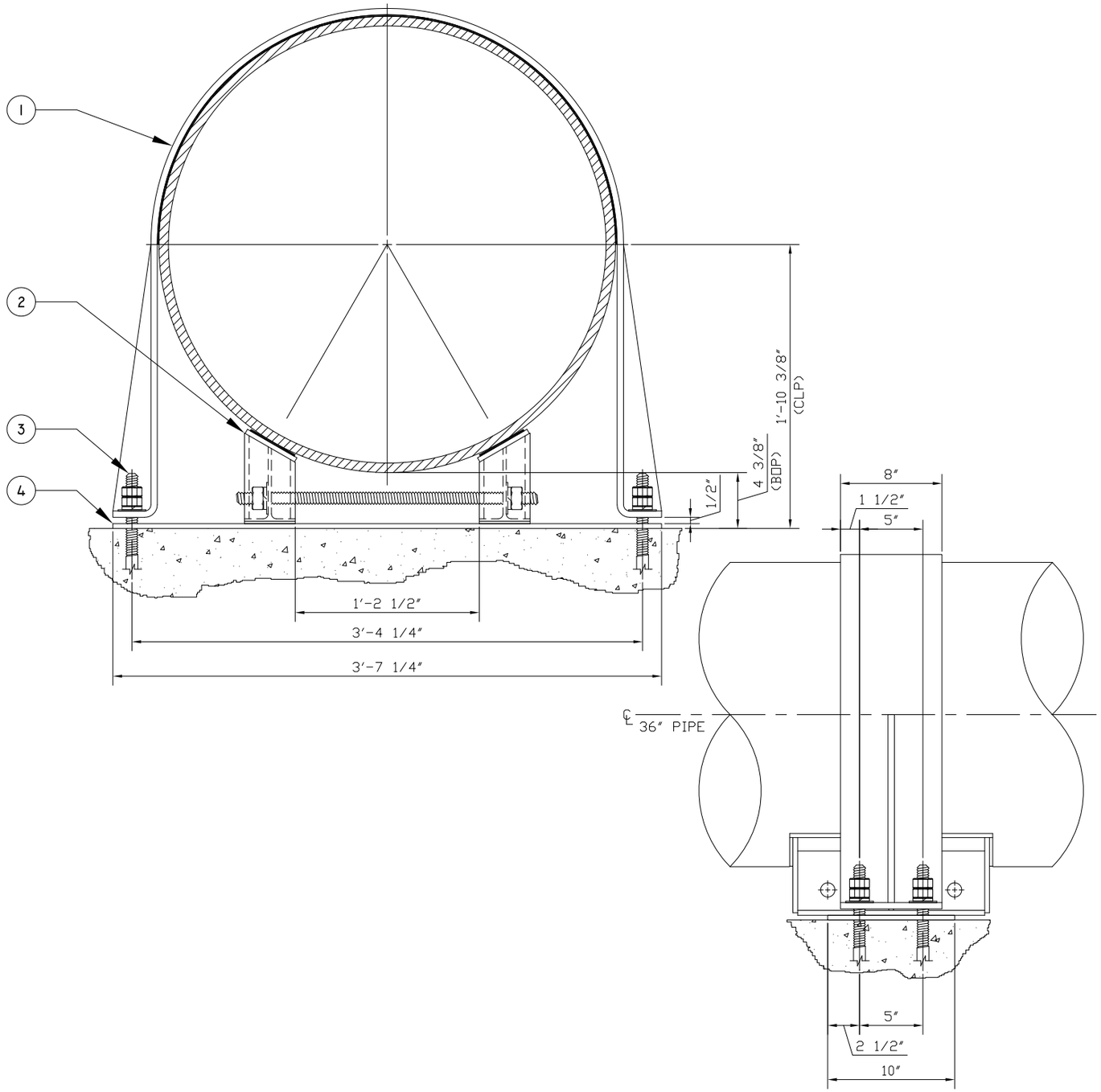

ITEM	QUAN.	DESCRIPTION	FINISH
1	1	PIPE STRAP FROM 1/2" X 8" PLATE WITH 1/8" NEOPRENE LINER	ASTM A36 A123 GALV.
2	1	"SIZE D" SHIM BLOCK ASSEMBLY	ASTM A36 A123 GALV.
3	4	7/8" ANCHORS	
4	1	3/8" X 10" BASE PLATE	ASTM A36 A153 GALV.

NOTES:

Rev.	Date	Description
1	01-04-19	Revise typo on CL pipe size.
0	07-24-15	Issued for Approval.

PIPE SPECIFICATIONS

PIPE SIZE: 36"

TEMPERATURE: N/A

INSULATION: N/A

MATERIAL: A-36

PIPE SYSTEM: Varies

QUOTE #:

GULF STATE HANGERS AND
SUPPORTS MANUFACTURERS, INC.
PHONE:(251) 653-6228
FAX:(251) 653-5356

PROJECT

REFERENCE DRAWINGS

1)_____ 3)_____

2)_____ 4)_____

REVISION NO. 1

SH. 1 OF 1

TITLE

36" PIPE STRAP WITH SHIM BLOCK ASSEMBLY